KitchenAid®

Food Processor

MODELS:

KFP1319BM0 (Black Matte)
KFP1319CU0 (Contour Silver)
KFP1319ER0 (Empire Red)
KFP1319OB0 (Onyx Black)
KFP1319WH0 (White)

04/17/2023
© 2023 KitchenAid
Part No. W11675415 Rev. A

HOUSING UNIT AND ATTACHMENT PARTS

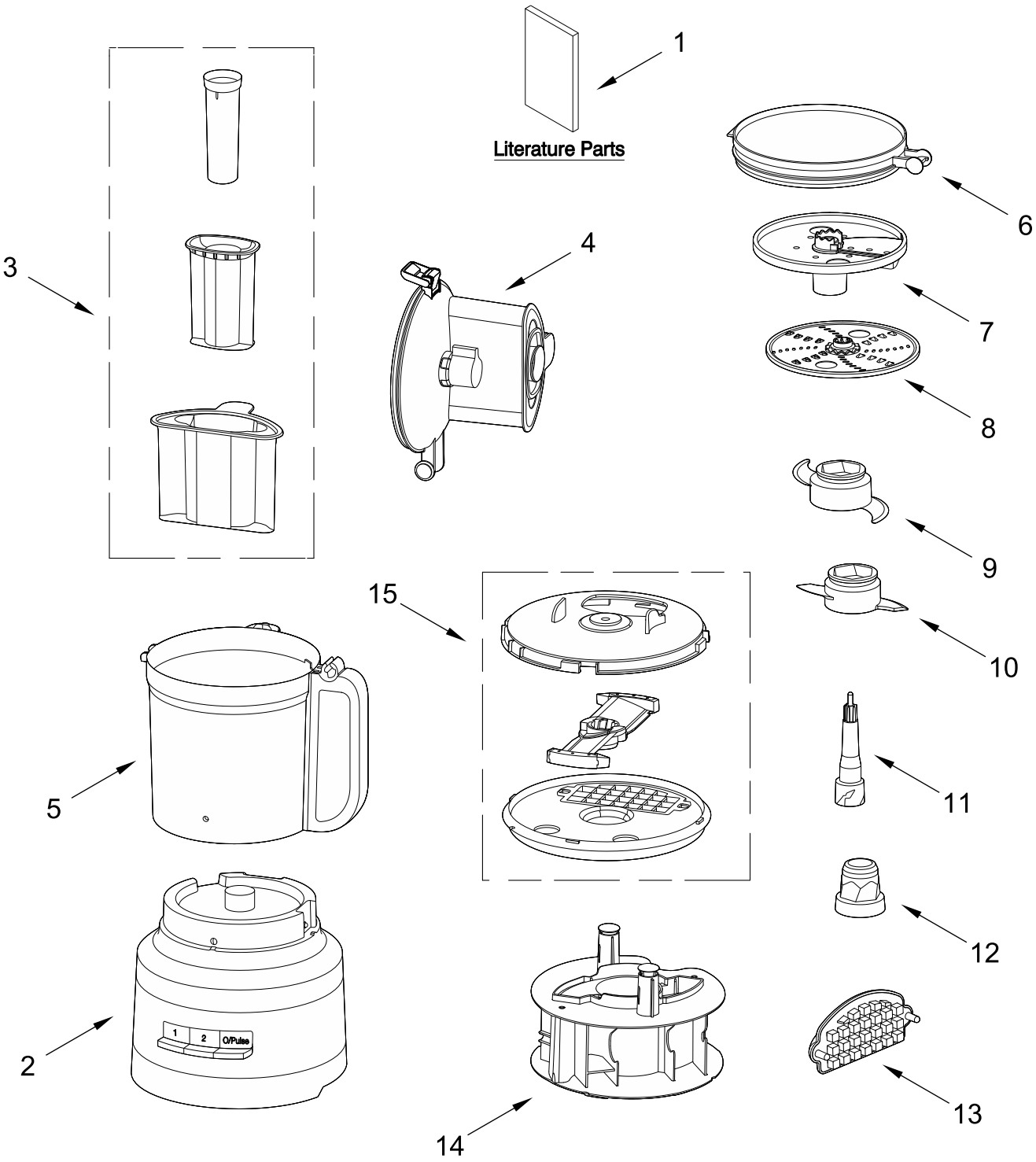

HOUSING UNIT AND ATTACHMENT PARTS

Illus. No.	Part No.	Description
1		Literature Parts
	W11462548	Use & Care Guide
2		Base (Not Serviced)
3	W11519115	3 in1 Food Pusher Assembly
4	W11519114	Work bowl cover assy w/ pushers
5	W11519113	13 cup work bowl assy
6	W11519119	Refrigerator Lid
7	W11519120	Externally Adjustable Slicing Disc
8	W11519121	Reversible Shredding Disc
9	W11519122	Multipurpose Blade
10	W11519123	Dough Blade
11	W11519124	Drive Adaptor (Upper)
12	W11519126	Drive Adaptor (Lower)
13	W11519131	Dicing Kit Clean Out Tool
14	W11519130	Storage Caddy
15	W11519129	Dicing Kit